DRAWING MADE IN AMERICAN PROJECTION

205

NUMBER 480693

S

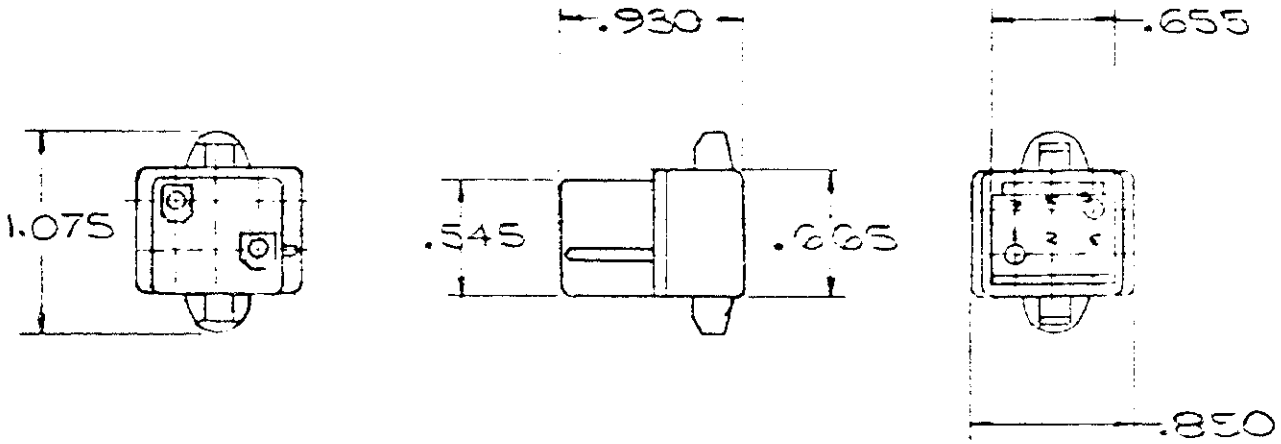

1. TO BE USED WITH MATE-N-LOK DUAL LANCE PINS.
2. MATES WITH PLUG 480690

HOUSING NO.	COLOR
1-480693-0	NATURAL

DIMENSIONS IN INCHES. DO NOT SCALE PRINT.

LTR	REVISION RECORD	ECN	DR CHK	DATE
B	OBSOLETED 1-1/1-9 PER CM-473	PJB	RS	7/8/86
A1	RESTORED		CM/RS	3-8-85
A	[illegible]	[illegible]	[illegible]	[illegible]

PRINT 53

DR [illegible] DE

CHK [illegible] 1-11-73 APP [illegible] 1-11-73

©1972 BY AMP INCORPORATED. ALL RIGHTS RESERVED. AMP PRODUCTS COVERED BY PATENTS AND/OR PATENTS PENDING

CUSTOMER COPY REFERENCE ONLY

MATERIAL [redacted]

NYLON

AMP INCORPORATED HARRISBURG, PENNA.

CLASS .084 PIN HOUSING

WIRE — RANGE — INSULATION

TYPE PANEL MOUNT

TOLERANCE EXCEPT AS NOTED ± .015 ± 1° 0'

SCALE 1-1

LOC CM A NO 480693 REV B

NAME 6 CIRCUIT MATE-N-LOK CAP

AMP 1252 REV 2/68